Blackbox Printed Parts Guide

Assembly Version: V106

Fusion Version: V132

07/03/2021 – Kris Brickman

THIS GUIDE IS IN-PROGRESS

Please consider submitting the missing “as printed” photos to complete this guide!

Use this guide to assist in printing the parts needed to build your own Blackbox. Open it along side of the V106 BOM found here.

A ZIP folder containing all the referenced files can be download from KB3D HERE.

BEFORE YOU BEGIN

- A 0.4mm nozzle is recommended for most parts, and some smaller parts were designed with this extrusion width in mind . If using a larger nozzle, ensure the resulting parts are strong and dimensionally accurate. Support settings and XY size compensation (AKA Horizantal expansion) should be tuned for your material prior to part printing.

- MATERIAL: Considerations include rigidity, heat deformation resistance, and stress creep resistance. Most materials are viable (aside from PLA) Best results will come from a glass or carbon reinforced polymer. If a non-filled material is used, stay away from the more elastic plastics like PETG.

- For best strength, print on the hotter end of your material temperature range. Use a low (or zero) part cooling fan speed where possible. Consider using the part cooling fan only on overhangs, support interfaces, and bridges.

- Blackbox parts are designed with printability in mind. Most parts will have an obvious orientation preference, and most are smaller in size. Still, printing in an enclosed build volume can help mitigate any warping with some materials.

- Spend some time perfecting the profile used for your chosen filament. Pay close attention to any "Elephants Foot" during test prints. Also ensure that walls are flat with no "pimples" from over extrusion. Consider enabling and tuning linear advance to mitigate bulging sharp corners.

- Blackbox has many printed parts and will require many days of printing along with **1.5-2.5 KG** of material. The actual time and material amount will depend on your specific build. See the "Build Sheet" in the Supplement section of Dozuki for details.

INDEX

Contents

BEFORE YOU BEGIN 1
INDEX 2
Materials & Settings 5
Material Options 6
Tuning Your Filament Profile 7
Guide Format 8
Acrylic Suspension Mount 9
Belt Clamp Rear 1 10
Belt Clamp Rear 2 11
Left Belt Corner Bracket - Bottom 12
Left Belt Corner Bracket - Top 13
Right Belt Corner Bracket - Bottom 14
Right Belt Corner Bracket - Top 15
Left Y Axis Bracket - Bottom 16
Left Y Axis Bracket - Top 17
Right Y Axis Bracket - Bottom 18
Right Y Axis Bracket - Top 19
(OPTIONAL) Print OR CNC Front Belt Clamp 20
(OPTIONAL) Print OR CNC Tool Plate 21
Counterweight Container - Left 22
Counterweight Container - Right 23
Counterweight Container Lid - Left 24
Counterweight Container Lid - Right 25
Upper Counterweight Idler - Left 30
Upper Counterweight Idler - Right 31
Lower Counterweight Idler – Part 1 32
Lower Counterweight Idler – Part 2 - Left 33
Lower Counterweight Idler – Part 2 - Right 34
Lower Counterweight Idler – Part 3 35
Lower Counterweight Pulley 36
Upper Counterweight Pulley 37

EK8 Bearing Spacer 38
Part Cooling Fan Duct - Universal 39
Z Axis Motor Mount 40
Z Axis Reduction Unit Mount 41
Z Axis Reduction Housing 42
Z Axis Reduction Housing Cap 43
Z Axis Counterweight Idler Pulley 44
Tool Dock 45
Tool Dock Spacer 46
Tool Dock Wire Guide 47
FDM Tool - Part 2 48
FDM Tool - Part 3 49
FDM Tool - Part 4 50
FDM Tool - Part 5 51
FDM Tool - Hinge 52
(OPTIONAL) Tool Lock Mount 53
Tool Wiper – Part 1 54
Tool Wiper – Part 2 55
Tool Wiper – Part 3 56
X Axis Bracket 57
XY Motor Bracket – Left – Part 1 58
XY Motor Bracket – Left – Part 2 59
XY Motor Bracket – Left – Part 3 60
XY Motor Bracket – Left – Part 4 61
XY Motor Bracket – Right – Part 1 62
XY Motor Bracket – Right – Part 2 63
XY Motor Bracket – Right – Part 3 64
XY Motor Bracket – Right – Part 4 65
Z Axis Belt Idler - Left 66
Z Axis Belt Idler - Right 67
Z Axis Belt Tensioner – Part 1 - Left 68
Z Axis Belt Tensioner – Part 2 - Left 69
Z Axis Belt Tensioner – Part 1 - Right 70
Z Axis Belt Tensioner – Part 2 - Right 71

Z Axis Belt Tensioner – Part 3 - Right 72
Z Axis Bracket – Left 73
Z Axis Bracket – Right 74
Z Axis Support Bracket – Left 75
Z Axis Support Bracket – Right 76
Extruder Driven Gear 77
Extruder Drive Gear 78
Y Axis End Stop Mount 79
Tool Lock End Stop Trigger 80
(OPTIONAL) Tool Lock End Stop Trigger (Drill Tool) 81
Machine Foot 82
Cable Chain Mount - XY 83
Cable Chain Mount – Z Bottom 84
Cable Chain Mount – Z Top (Bed) 85

Materials & Settings

Below are the recommended specifications for FDM printing of Blackbox parts. All slicing programs will have these settings with slight variations in naming.

For prints recommending the use of a 0.4mm nozzle:

- LAYER HEIGHT: 0.2mm
- LINE WIDTH: 0.4mm
- INFILL: 50-65% (Grid, Gyroid, Honeycomb, Triangle or Cubic)
- PERIMETERS: 4-5
- TOP & BOTTOM SOLID LAYERS: 5-8

For prints recommending the use of a 0.2mm nozzle:

- LAYER HEIGHT: 0.1mm
- LINE WIDTH: 0.2mm
- INFILL: 50-65% (Grid, Gyroid, Honeycomb, Triangle or Cubic)
- PERIMETERS: 4-5
- TOP & BOTTOM SOLID LAYERS: 5-8

Note that some parts in this guide are named “Optional” Details can be found at the Dozuki Build Options Page.

Material Options

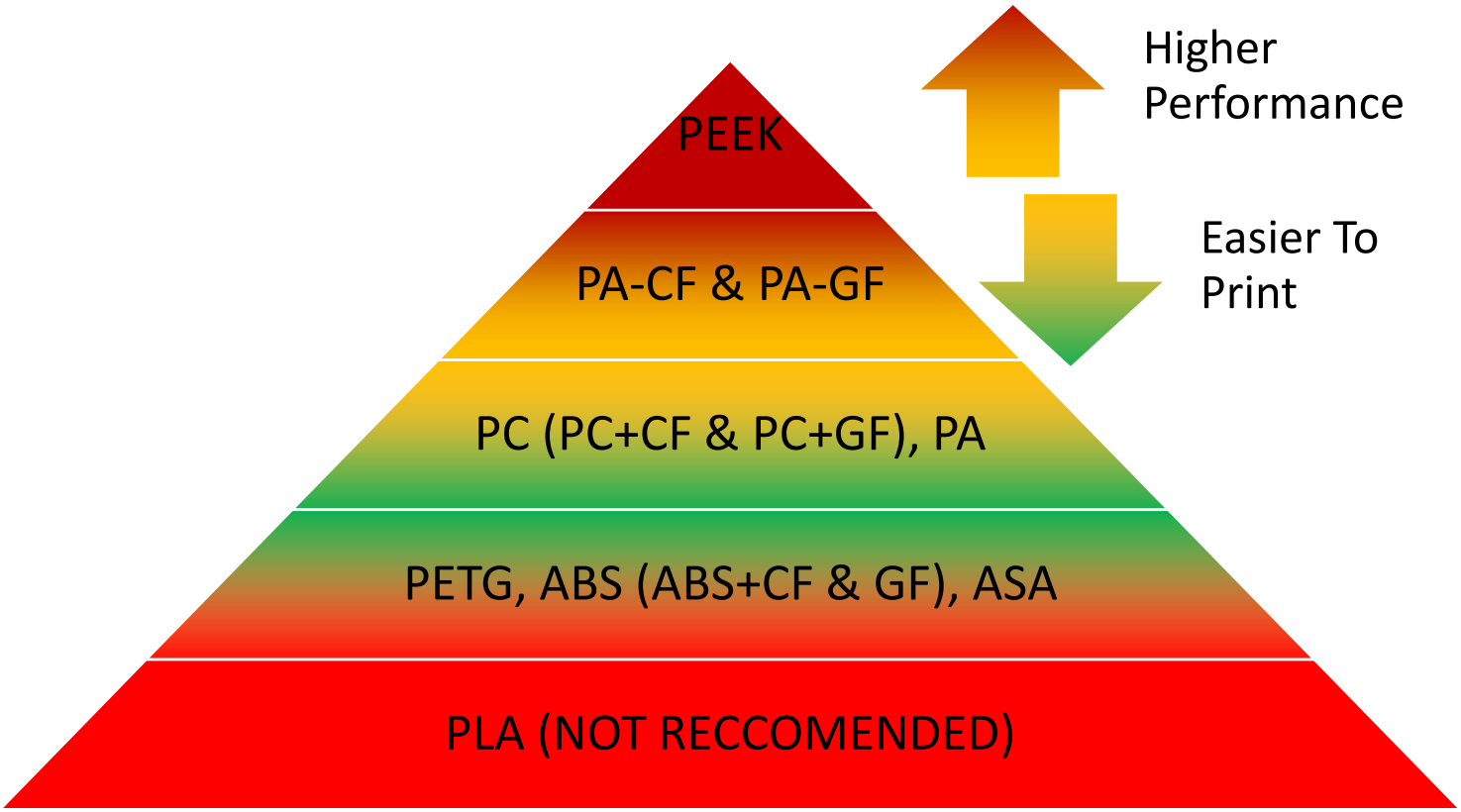

What we recommend:

Carbon Fiber Filled PolyCarbonate (PC) or Nylon (PA)

Why?

PC and PA are both capable engineering materials that can stand the test of time under the stresses of tightened fasteners and belts. The Carbon fiber adds rigidity to what would otherwise be a material prone to flex. The fiber fill also helps to avoid warping during/after printing and allows for cleaner bridging and overhangs.

Tuning Your Filament Profile

As stated above, you should be sure to spend the time getting to know your filament of choice and how it interacts with your printer. Due to the diversity of filaments and machines, there is no one-size-fits-all standard that we can supply you with. Double check the performance of the following settings to have the best experience with the least amount of post-processing.

1. Temperature
2. Retraction
3. Print speeds and accelerations/jerk
4. Horizontal Expansion (XY Size Compensation)
5. Extrusion E-steps / Flow Rate
6. Support Z distance
7. Support density and interface
8. Bridging speed and flow rate
9. Linear Advance

Check out this lovely and free guide from TeachingTech for some helpful tips/tools on many of these topics.

Guide Format

NAME OF PART

FILENAME OF PART

Belt Clamp Rear 1

SHORT DESCRIPTION

Print_BeltClamp_Rear1 v3.stl

Used to secure timing belt to back side of X Carriage

QTY 1

QUANTITY NEEDED

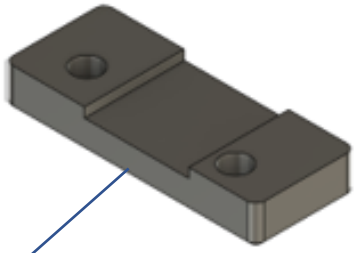

PICTURE OF RECCOMENDED PRINT ORIENTATION OF PART

NOTE: Some photos have CAD details and shadows. This view is only to show the ideal printing orientation of the part for optimizing results.

PICTURE OF A COMPLETED PRINT

NOTE: Renders are great, but this view will show a printed part in the real world.

STRUCTURAL/NON-STRUCTURAL – WITH MATERIAL RECCOMENDATIONS

BRIDGING PRESENT (YES, NO)

Structural – Use only suitable materials

Supports: No Bridging: No Special Considerations: None

SUPPORTS (YES-ALL, YES-BUILD-PLATE ONLY, NO)

SPECIAL NOTES /DIRECTIVES FOR SUCCESS

Acrylic Suspension Mount

Print Acryl Suspension v1.stl

Used to mount acrylic side panels to printed corner bracket covers.

QTY 16

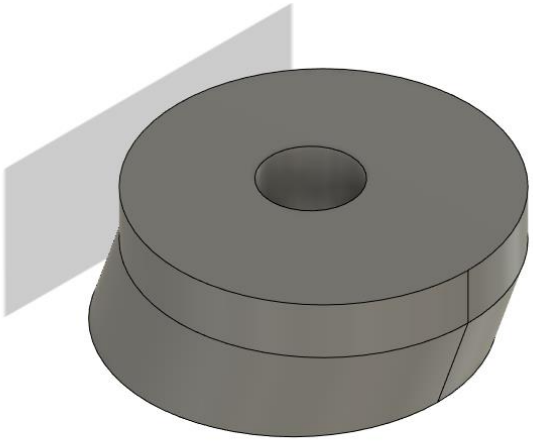

Non Structural – All materials OK

Supports: No Bridging: No Special Considerations: None

Belt Clamp Rear 1

Print_BeltClamp_Rear1 v3.stl

Used to secure timing belt to back side of X Carriage

QTY 1

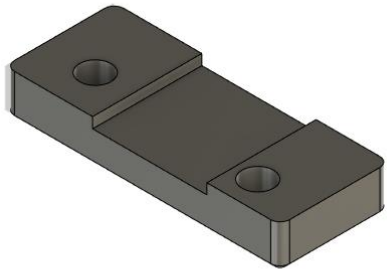

Structural – Use only suitable materials

Supports: No Bridging: No Special Considerations: None

Belt Clamp Rear 2

Print_BeltClamp_Rear2 v3.stl

Used to secure timing belt to back side of X Carriage

QTY 1

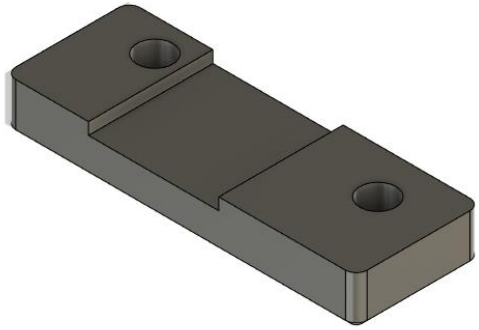

Structural – Use only suitable materials

Supports: No Bridging: No Special Considerations: None

Left Belt Corner Bracket - Bottom

Print_Bracket_BeltCorner_L_Bottom v7.stl

Half of the left belt guide idler bracket

QTY 1

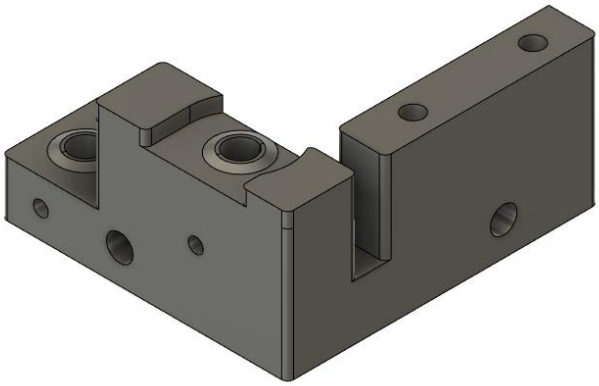

Structural – Use only suitable materials

Supports: No Bridging: Yes Special Considerations: Horizontal holes may require reaming.

Left Belt Corner Bracket - Top

Print_Bracket_BeltCorner_L_Bottom v3.stl

Half of the left belt guide idler bracket

QTY 1

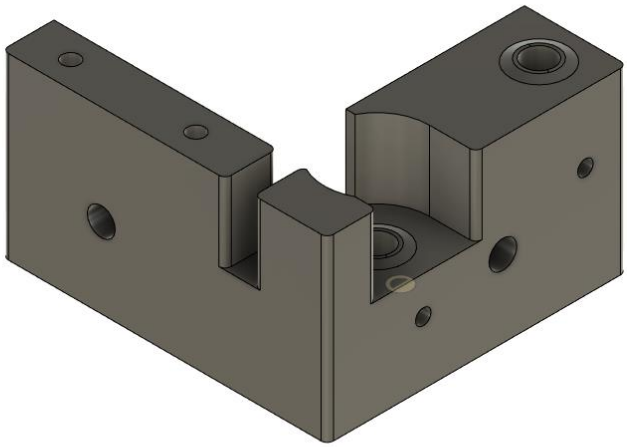

Structural – Use only suitable materials

Supports: No Bridging: Yes Special Considerations: Horizontal holes may require reaming.

Right Belt Corner Bracket - Bottom

Print_Bracket_BeltCorner_R_Bottom v1.stl

Half of the right belt guide idler bracket

QTY 1

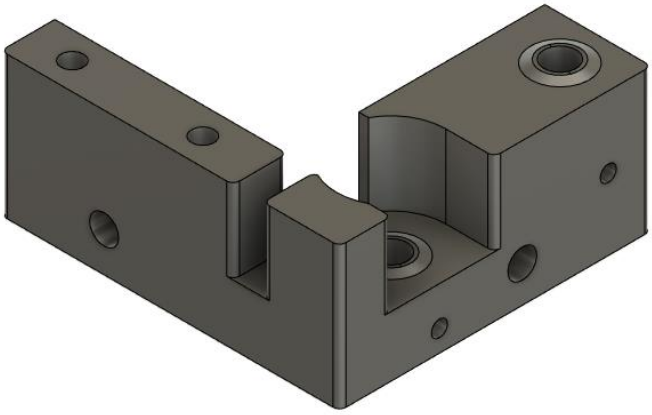

Structural – Use only suitable materials

Supports: No Bridging: Yes Special Considerations: Horizontal holes may require reaming.

Right Belt Corner Bracket - Top

Print_Bracket_BeltCorner_R_Top v3.stl

Half of the right belt guide idler bracket

QTY 1

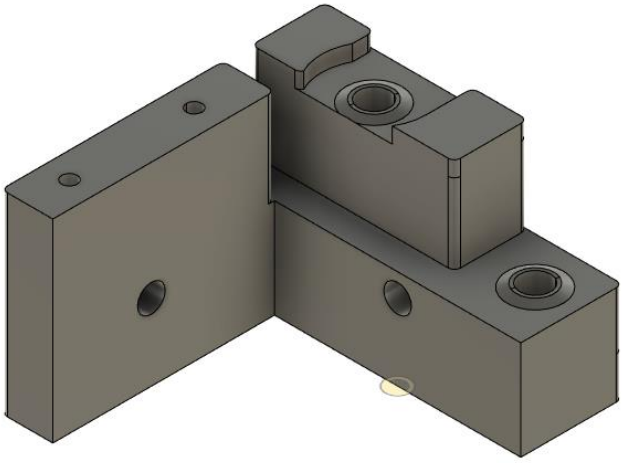

Structural – Use only suitable materials

Supports: No Bridging: Yes Special Considerations: Horizontal holes may require reaming.

Left Y Axis Bracket - Bottom

Print_Bracket_YAxis_L_Bottom v3.stl

Half of the left Y axis bracket

QTY 1

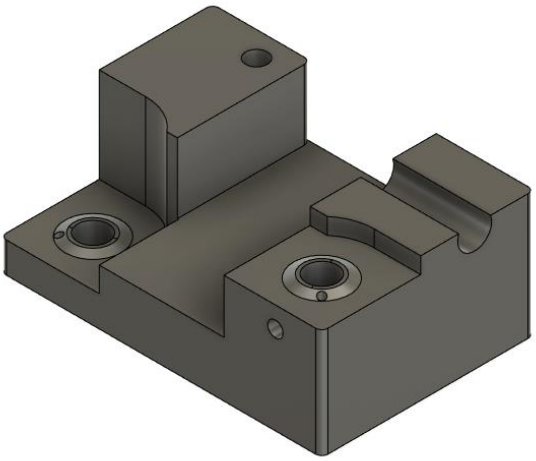

Structural – Use only suitable materials

Supports: No Bridging: Yes Special Considerations: Horizontal holes may require reaming.

Left Y Axis Bracket - Top

Print_Bracket_YAxis_L_Top v2.stl

Half of the left Y axis bracket

QTY 1

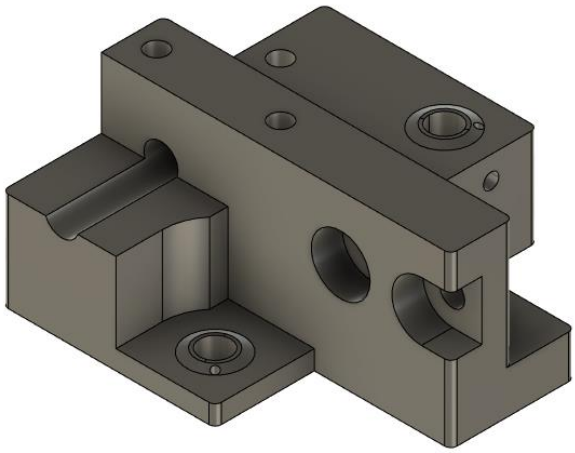

Structural – Use only suitable materials

Supports: Yes - All Bridging: Yes Special Considerations: Horizontal holes may require reaming.

Right Y Axis Bracket - Bottom

Print_Bracket_YAxis_R_Bottom v2.stl

Half of the right Y axis bracket

QTY 1

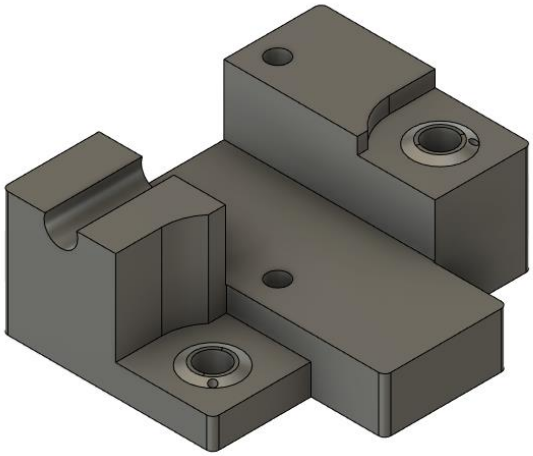

Structural – Use only suitable materials

Supports: No Bridging: Yes Special Considerations: Horizontal holes may require reaming.

Right Y Axis Bracket - Top

Print_Bracket_YAxis_R_Top v2.stl

Half of the right Y axis bracket

QTY 1

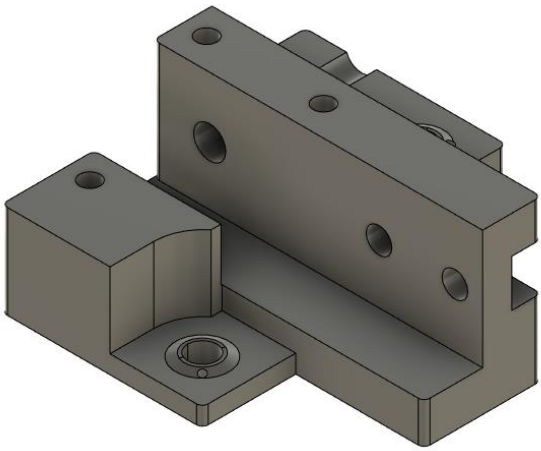

Structural – Use only suitable materials

Supports: Yes - All Bridging: Yes Special Considerations: Horizontal holes may require reaming.

(OPTIONAL) Print OR CNC Front Belt Clamp

CNC_Print Belt Clamp.stl

Used to secure front timing belts to axis when not opting for aluminum parts. See Dozuki Build Options

QTY 2

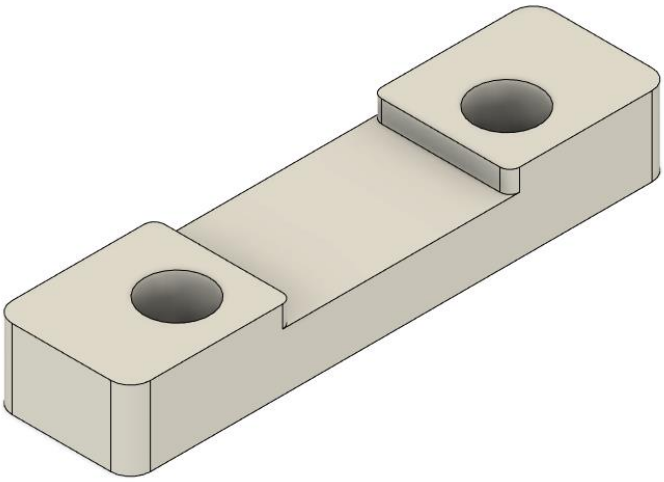

Structural – Use only suitable materials

Supports: No Bridging: No Special Considerations: Use a 0.2mm nozzle if possible. Otherwise use a 0.4mm nozzle with a 0.4mm line width.

(OPTIONAL) Print OR CNC Tool Plate

CNC_Print_ToolHead_part01.stl

Provides interface for tool locking

QTY 1-5 (Depends on tool quantity)

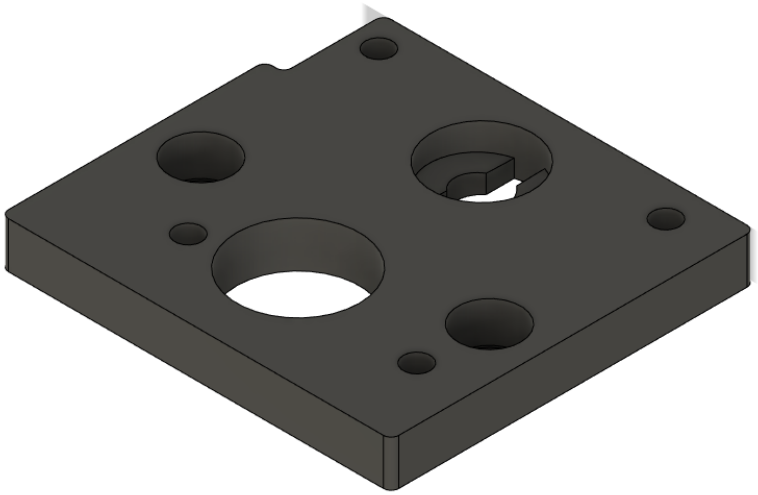

Structural – Use only suitable materials

Supports: No Bridging: No Special Considerations: Reduce layer height to 0.1mm for a smoother lock ramp profile.

Counterweight Container - Left

Print_CounterWeightContainer01 v2.stl

Used to contain and suspend Z axis counterweight material

QTY 1

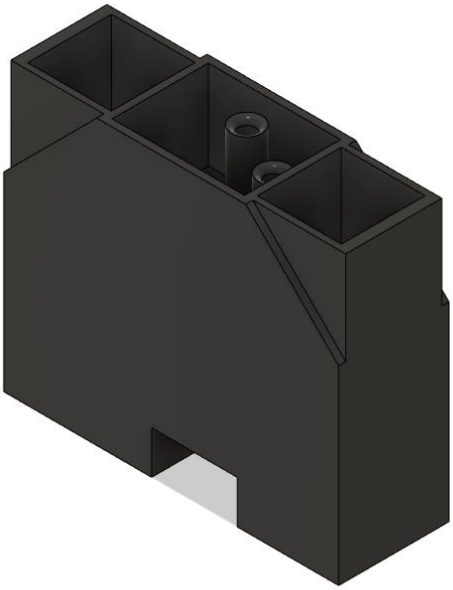

Non Structural – All materials OK

Supports: Yes Bridging: No Special Considerations: None

Counterweight Container - Right

Print_CounterWeightContainer02 v1.stl

Used to contain and suspend Z axis counterweight material

QTY 1

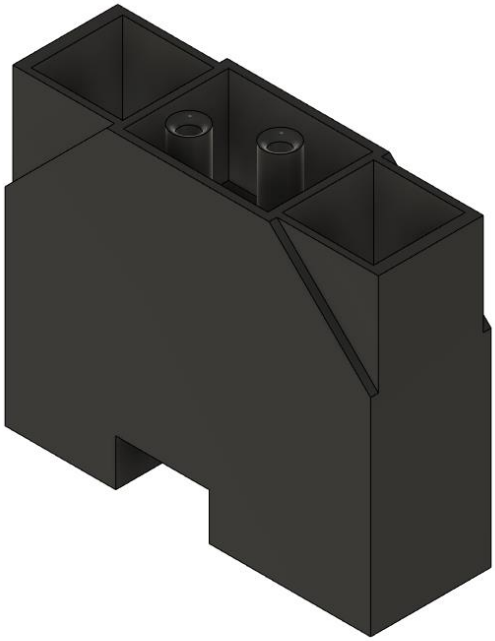

Non Structural – All materials OK

Supports: Yes Bridging: No Special Considerations: None

Counterweight Container Lid - Left

Print_ContainerLid 01 v2.stl

Used to cover and retain counterweight media

QTY 1

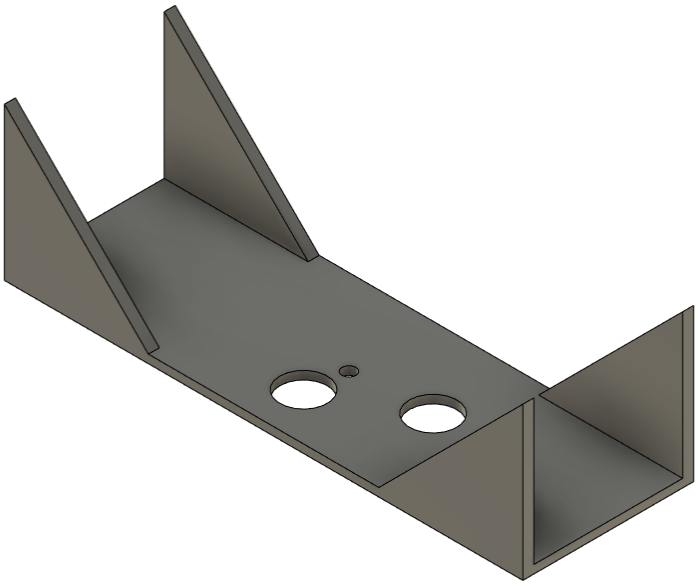

Non Structural – All materials OK

Supports: No Bridging: No Special Considerations: None

Counterweight Container Lid - Right

Print_ContainerLid 02 v1.stl

Used to cover and retain counterweight media

QTY 1

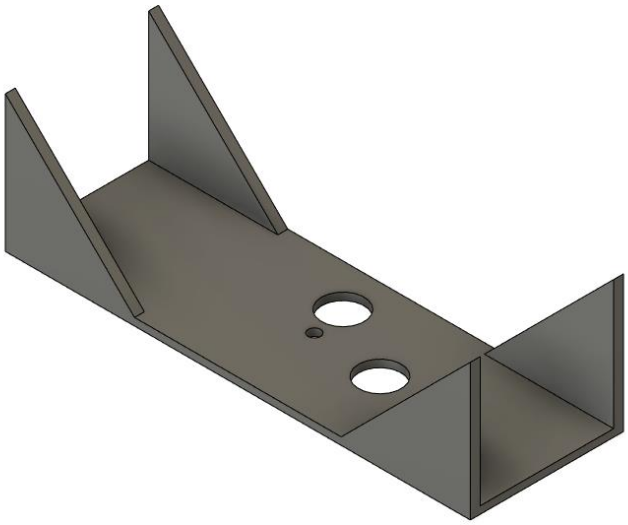

Non Structural – All materials OK

Supports: No Bridging: No Special Considerations: None

Upper Counterweight Idler - Left

Print_CWIdlerUpper01 v1.stl

Used to constrain and guide counterweight rope at bottom side of upper extrusions.

QTY 1

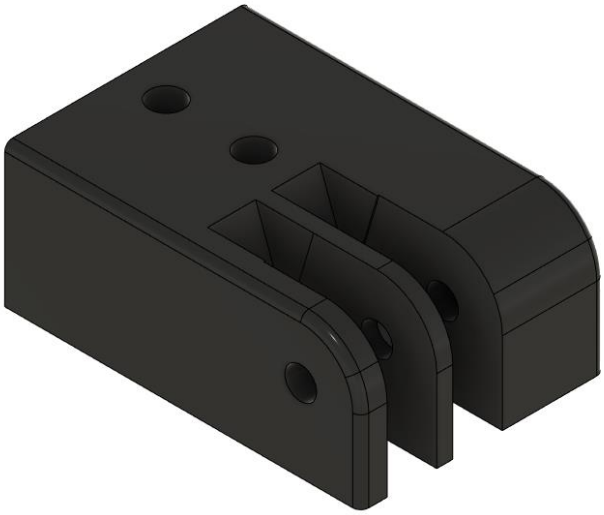

Structural – Use only suitable materials

Supports: No Bridging: No Special Considerations: Horizontal holes may require reaming.

Upper Counterweight Idler - Right

Print_CWIdlerUpper02 v1.stl

Used to constrain and guide counterweight rope at bottom side of upper extrusions.

QTY 1

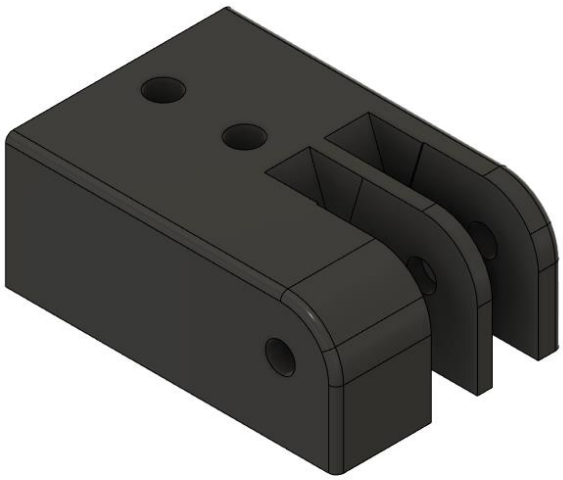

Structural – Use only suitable materials

Supports: No Bridging: No Special Considerations: Horizontal holes may require reaming.

Lower Counterweight Idler – Part 1

Print_LowerPulleyMountPt1 v1.stl

Used to mount lower counterweight pulley system to underside of lower extrusions

QTY 2

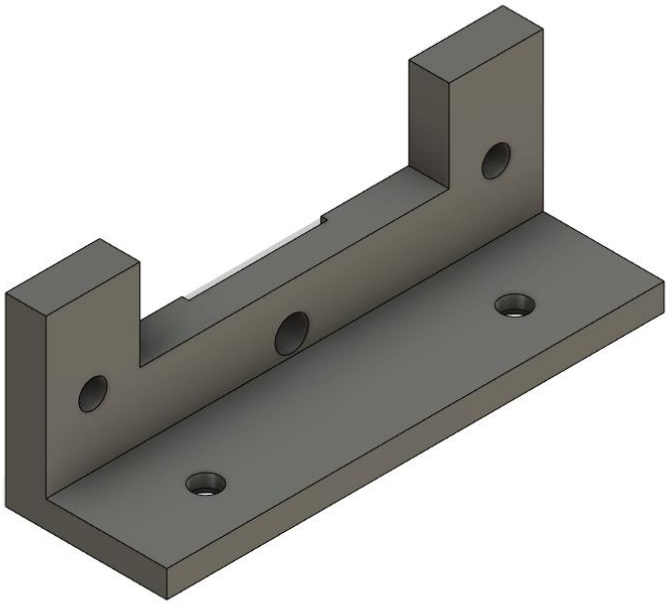

Structural – Use only suitable materials

Supports: No Bridging: No Special Considerations: Horizontal holes may require reaming.

Lower Counterweight Idler – Part 2 - Left

Print_LowerPulleyMount02_L v3.stl

Used to mount lower counterweight pulley retainer to frame bracket.

QTY 1

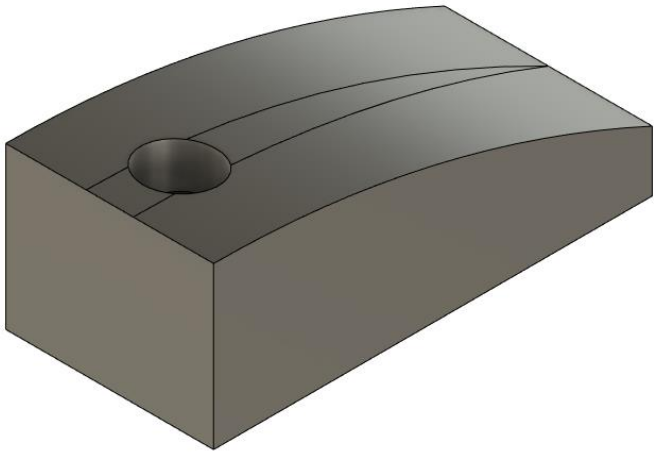

Structural – Use only suitable materials

Supports: Yes Bridging: No Special Considerations: None

Lower Counterweight Idler – Part 2 - Right

Print_LowerPulleyMount02_R v1.stl

Used to mount lower counterweight pulley retainer to frame bracket.

QTY 1

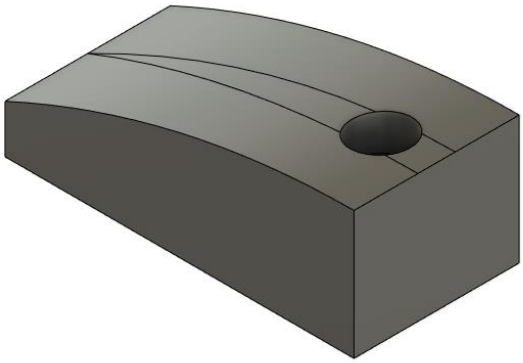

Structural – Use only suitable materials

Supports: Yes Bridging: No Special Considerations: None

Lower Counterweight Idler – Part 3

Print_LowerPulleyMountPt3 v3.stl

Used to retain lower counterweight pulley.

QTY 2

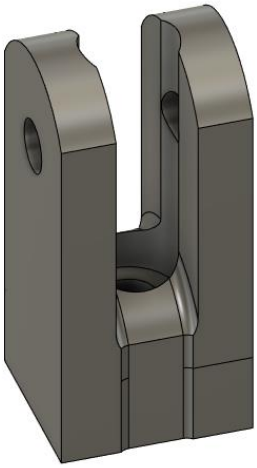

Structural – Use only suitable materials

Supports: No Bridging: No Special Considerations: Horizontal holes may require reaming.

Lower Counterweight Pulley

Print_CWPulleyLower v1.stl

Used to guide and constrain counterweight rope at lower mount

QTY 2

Structural – Use only suitable materials

Supports: No Bridging: No Special Considerations: Bearings should press fit into bore. Use a 0.2mm nozzle and 0.1mm layer heights if possible.

Upper Counterweight Pulley

Print_CWUpperIdlerPulley v1.stl

Used to guide and constrain counterweight rope at upper mount

QTY 4

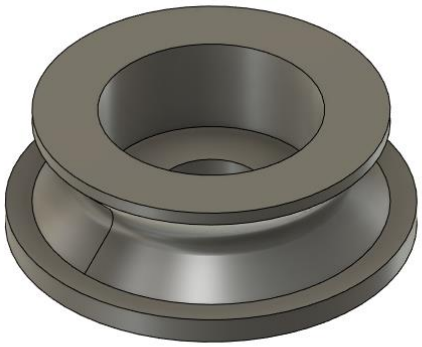

Structural – Use only suitable materials

Supports: No Bridging: No Special Considerations: Bearings should press fit into bore. Use a 0.2mm nozzle and 0.1mm layer heights if possible.

EK8 Bearing Spacer

Print_EK8_Spacer v1.stl

Used to increase height of EK8 bearing to keep 8mm Z shaft level

QTY 1

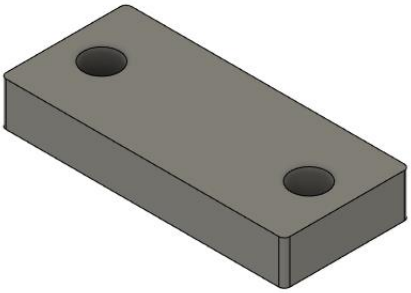

Non Structural – All materials OK

Supports: No Bridging: No Special Considerations: None

Part Cooling Fan Duct – Universal

Print_Fanduct v1.stl

Used to cool printed plastics

QTY 1

Non Structural – All materials OK

Supports: No Bridging: No Special Considerations: Consider higher temperature resistance materials.

Z Axis Motor Mount

Print_PulleyReduction_part01 v6.stl

Used to mount Z axis motor to printer frame

QTY 1

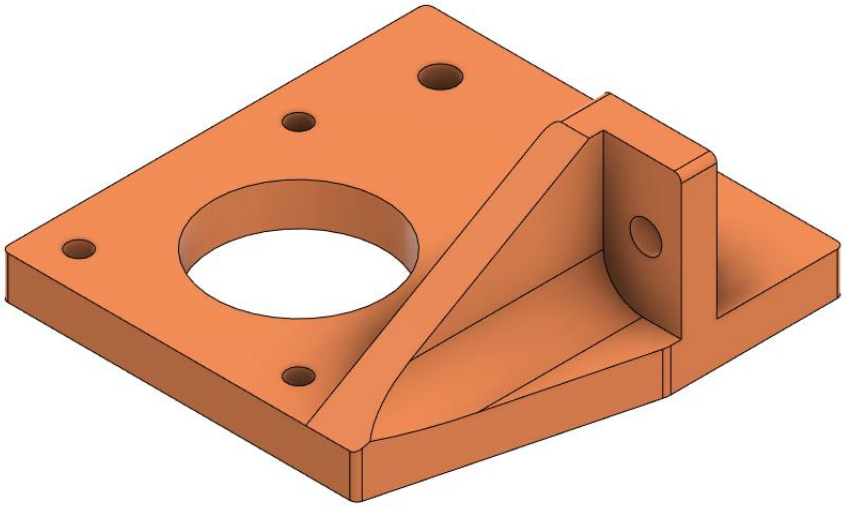

Structural – Use only suitable materials

Supports: No Bridging: No Special Considerations: Horizontal holes may require reaming.

Z Axis Reduction Unit Mount

Print_PulleyReduction_part02 v9.stl

Used to mount Z axis reduction gear box to printer frame

QTY 1

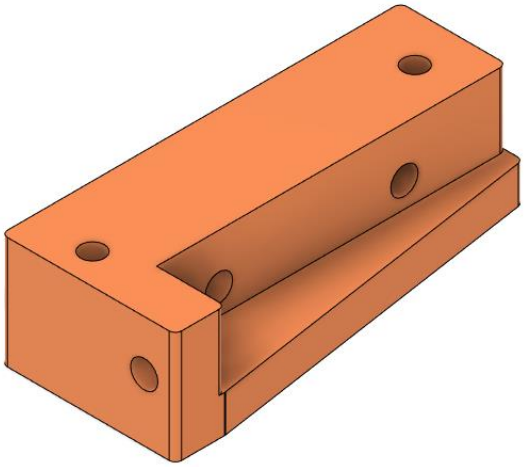

Structural – Use only suitable materials

Supports: No Bridging: No Special Considerations: Horizontal holes may require reaming.

Z Axis Reduction Housing

Print_PulleyReduction_part03 v4.stl

Used to house pulley reduction unit

QTY 1

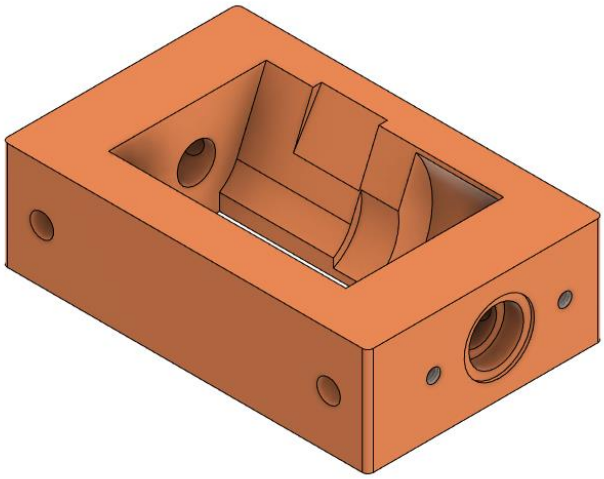

Structural – Use only suitable materials

Supports: Yes – All Bridging: No Special Considerations: Horizontal holes may require reaming. Post processing may be needed to ensure flanged bearing fit nicely into both sides of part.

Z Axis Reduction Housing Cap

Print_PulleyReduction_part04 v2.stl

Used to house pulley reduction unit

QTY 2

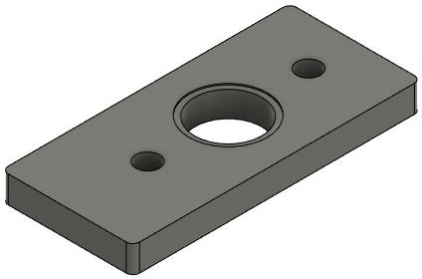

Structural – Use only suitable materials

Supports: No Bridging: No Special Considerations: None

Z Axis Counterweight Idler Pulley

Print_Tackle_Roller v2.stl

Not to be confused with Upper Idler pulleys for counterweight idler assembly.!

QTY 2

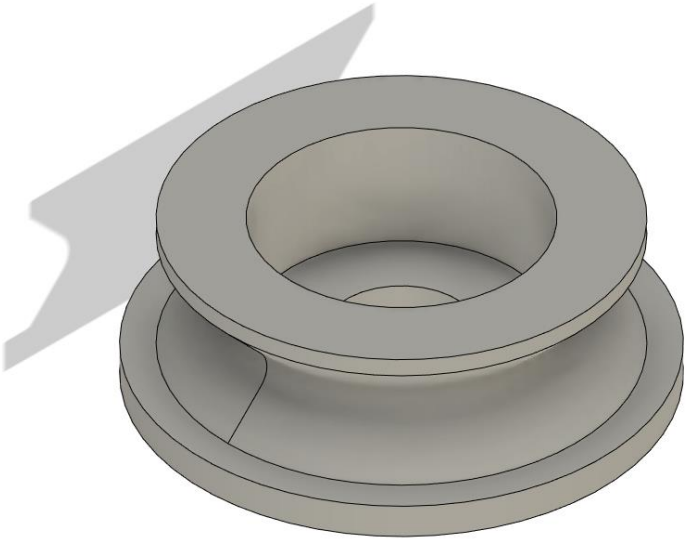

Structural – Use only suitable materials

Supports: No Bridging: No Special Considerations: Bearings should press fit into bore. Use a 0.2mm nozzle and 0.1mm layer heights if possible.

Tool Dock

Print_ToolDock v6.stl

Used to retain inactive tools

QTY 1-5 (Depends on tool count)

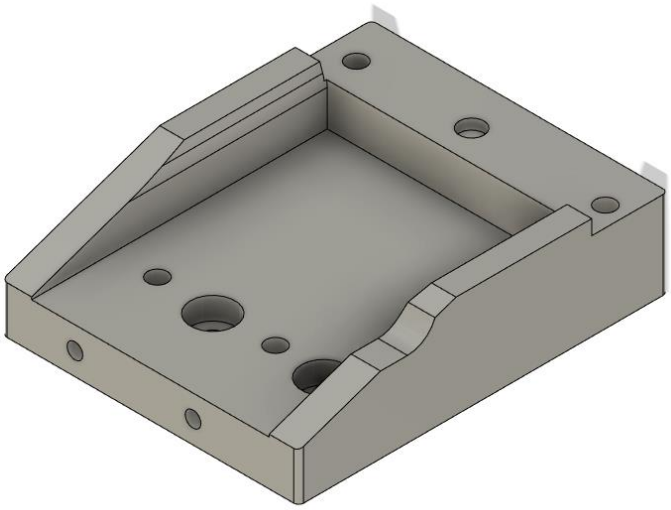

Structural – Use only suitable materials

Supports: Yes Bridging: No Special Considerations: Horizontal holes may require reaming.

Tool Dock Spacer

Print_ToolDockSpacer v4.stl

Used to locate tool docks and act as Bowden/wire pass-thru

QTY 1-5 (Depends on tool count)

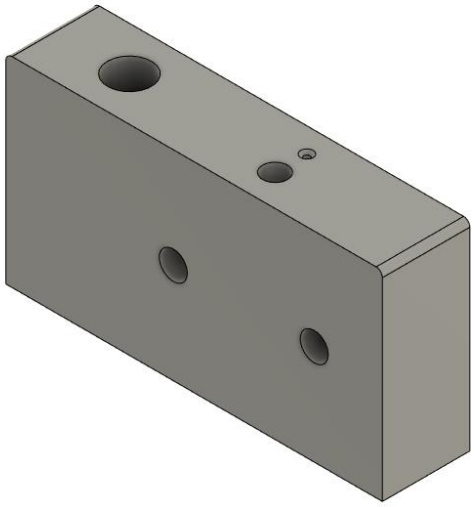

Structural – Use only suitable materials

Supports: Yes Bridging: No Special Considerations: Horizontal holes may require reaming.

Tool Dock Wire Guide

Print_ToolDockWireGuide v1.stl

Used to locate and retain hot end/thermistor wiring

QTY 1-5 (Depends on tool count)

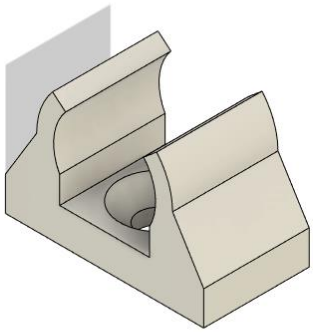

Non- Structural – All Materials OK

Supports: No Bridging: No Special Considerations: Use a 0.2mm nozzle and 0.1mm layer heights if possible.

FDM Tool - Part 2

Print_ToolHead_part02 v11.stl

Used to house Bondtech shaft support bearing

QTY 1-5 (Depends on tool count)

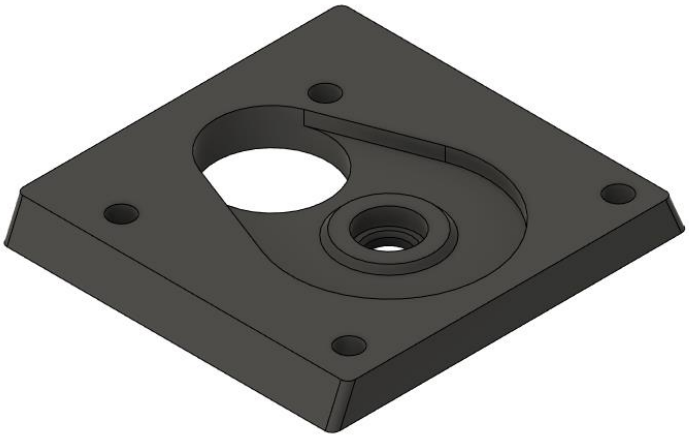

Structural – Use only suitable materials

Supports: Yes Bridging: No Special Considerations: Bearing should press fit into printed part. Otherwise use epoxy to secure.

FDM Tool - Part 3

Print_ToolHead_part03 v38.stl

Main body of each FDM tool

QTY 1-5 (Depends on tool count)

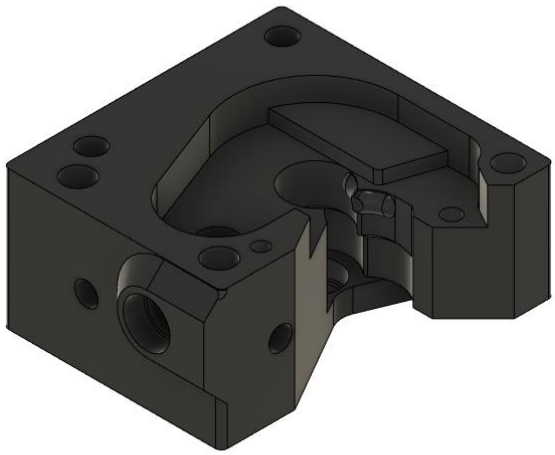

Structural – Use only suitable materials

Supports: Yes Bridging: Yes Special Considerations: Horizontal holes may require reaming. Use 0.1mm layer heights if possible, around the filament path constraint protrusions. Post-processing may be necessary at filament pass-thru.

FDM Tool - Part 4

Print_ToolHead_part04 v3.stl

Wire/Cable Guide and retainer for each FDM tool

QTY 1-5 (Depends on tool count)

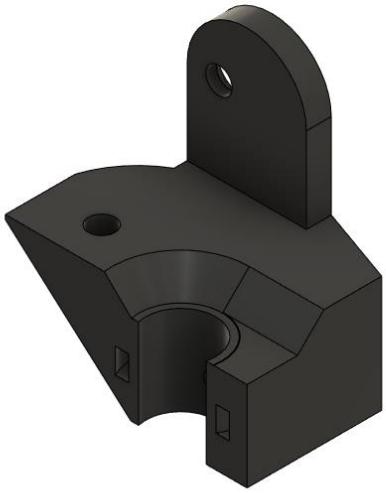

Structural – Use only suitable materials

Supports: No Bridging: Yes Special Considerations: Horizontal holes may require reaming. Use 0.1mm layer heights if possible. Use supports if your machine is not capable of cleanly producing the 55 degree overhang.

FDM Tool - Part 5

Print_ToolHead_part05 v3.stl

Wire guide for thermistor and heater cartridge for each FDM tool

QTY 1-5 (Depends on tool count)

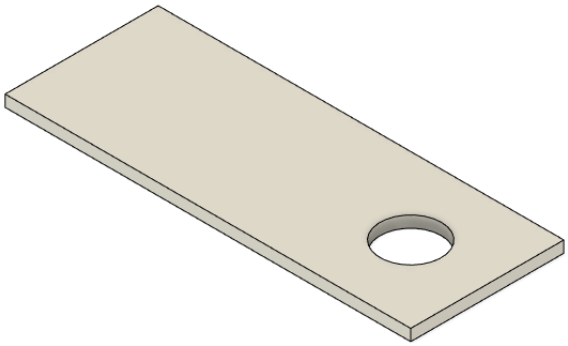

Structural – Use only suitable materials

Supports: No Bridging: No Special Considerations: Material choice should consider that part should be able to handle light bending stresses. Increase or decrease thickness via scaling Z in the slicer if needed.

FDM Tool - Hinge

Print_ToolHinge v9.stl

Used to set filament tension and house dual drive Bondtech shaft

QTY 1-5 (Depends on tool count)

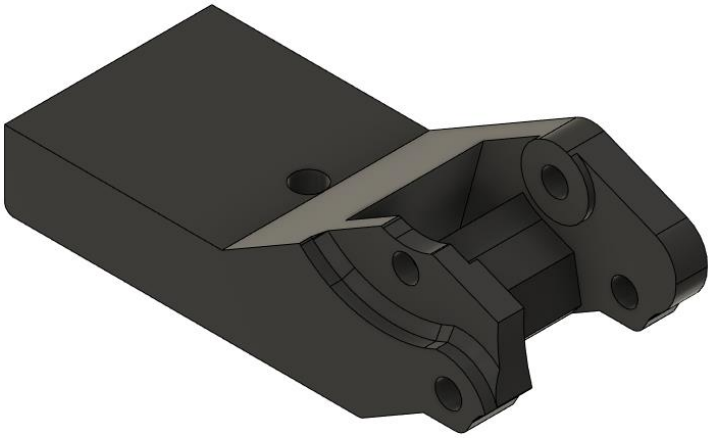

Structural – Use only suitable materials

Supports: Yes Bridging: No Special Considerations: Horizontal holes may require reaming. Print at 0.1mm layer heights. Part cooling fan on at 45 degree overhang.

(OPTIONAL) Tool Lock Mount

Print_ToolLockMountNema8 v12.stl

Mounts Nema 8 tool lock to X axis printed bracket on standard builds. See Build Options page on Dozuki.

QTY 1

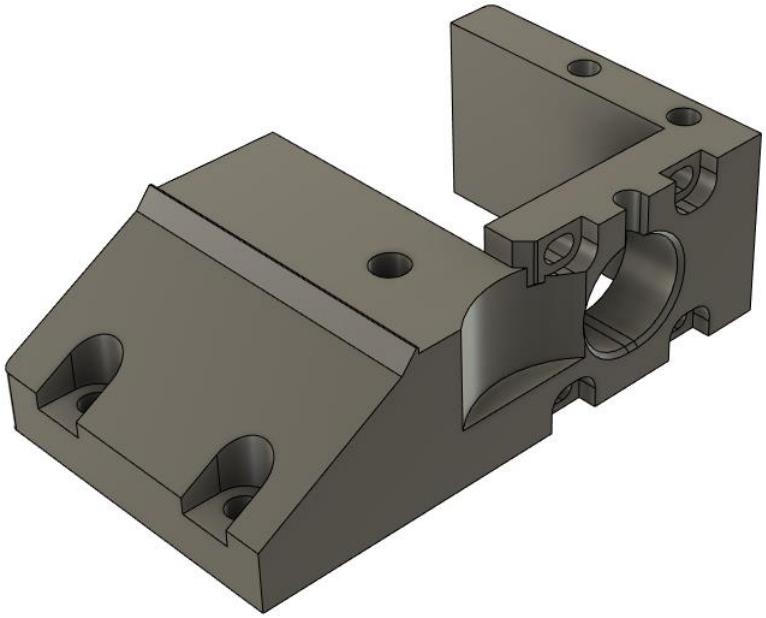

Structural – Use only suitable materials

Supports: Yes – all Bridging: No Special Considerations: Horizontal holes may require reaming.

Tool Wiper – Part 1

Print_ToolWiper_part01.stl

Used to house nozzle wiper and leak blocker silicones for clean tool changing

QTY 1-5 (Depends on tool count)

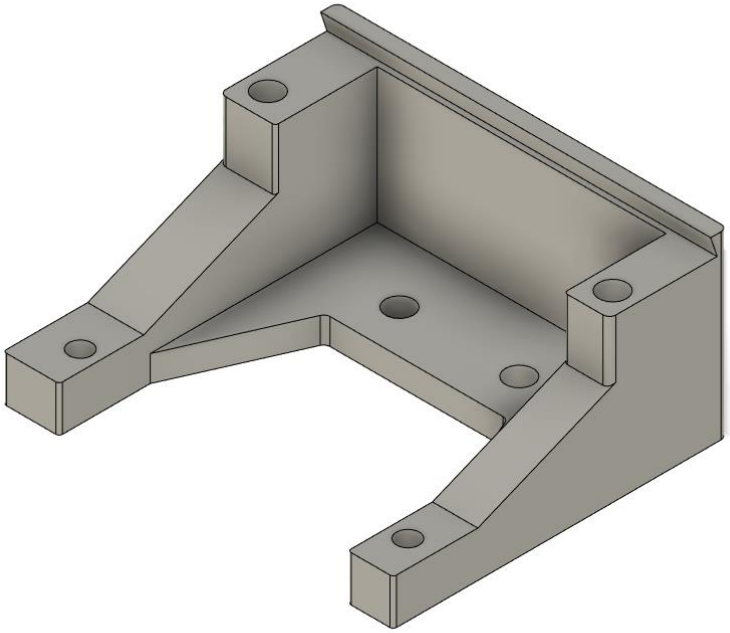

Non-Structural – All Materials OK

Supports: No Bridging: No Special Considerations: Some radiant heat is possible when using high idle tool temperatures. Consider a heat resistant material.

Tool Wiper – Part 2

Print_ToolWiper_part02.stl

Used to mount silicone nozzle wiper pads

QTY 1-5 (Depends on tool count)

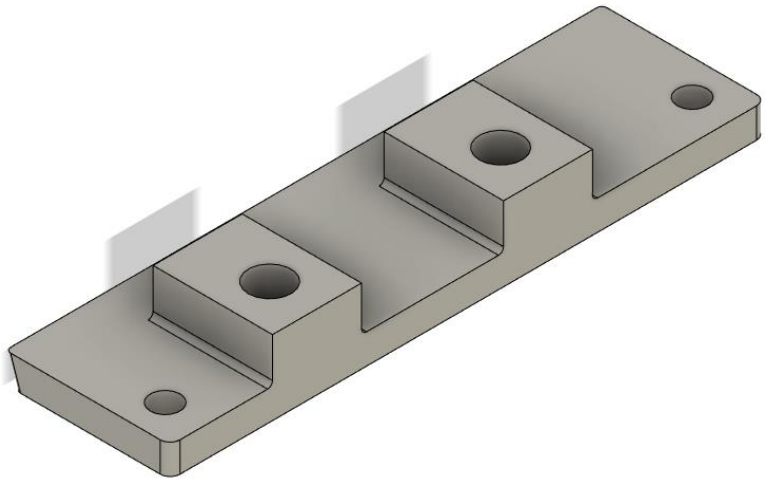

Non-Structural – All Materials OK

Supports: No Bridging: No Special Considerations: Some radiant heat is possible when using high idle tool temperatures. Consider a heat resistant material.

Tool Wiper – Part 3

Print_ToolWiper_part03.stl

Used to space first and second silicone nozzle wiper

QTY 1-5 (Depends on tool count)

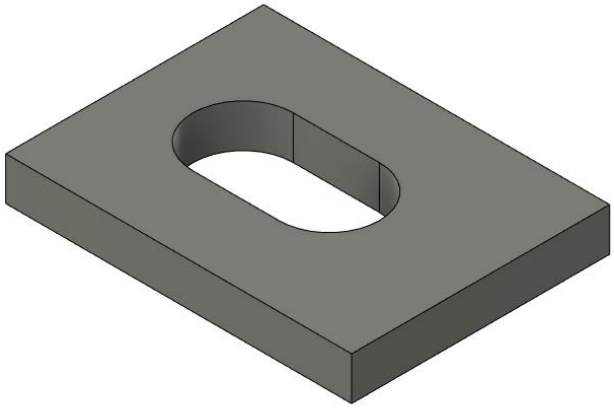

Non-Structural – All Materials OK

Supports: No Bridging: No Special Considerations: Some radiant heat is possible when using high idle tool temperatures. Consider a heat resistant material.

X Axis Bracket

Print_XBracketV6.stl

The main printed body mounted to the aluminum X-plate

QTY 1

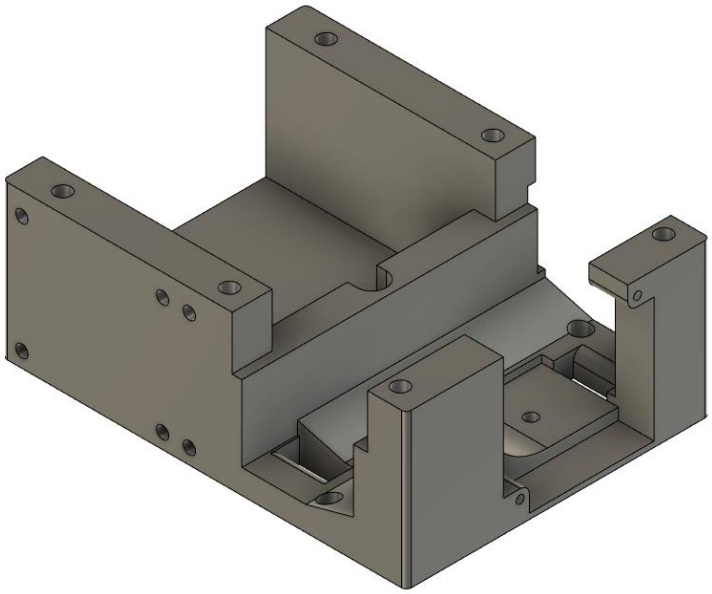

Structural – Use only suitable materials

Supports: Yes - All Bridging: Yes Special Considerations: Horizontal holes may require reaming. Overall part strength and dimensions critical.

XY Motor Bracket – Left – Part 1

Print_XYMotor_Bracket_part01_L v4.stl

Part of larger motor bracket assembly

QTY 1

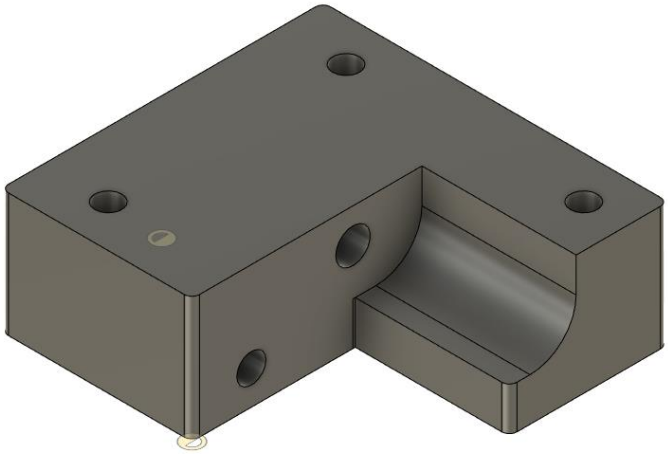

Structural – Use only suitable materials

Supports: No Bridging: No Special Considerations: Horizontal holes may require reaming.

XY Motor Bracket – Left – Part 2

Print_XYMotor_Bracket_part02_L v3.stl

Part of larger motor bracket assembly

QTY 1

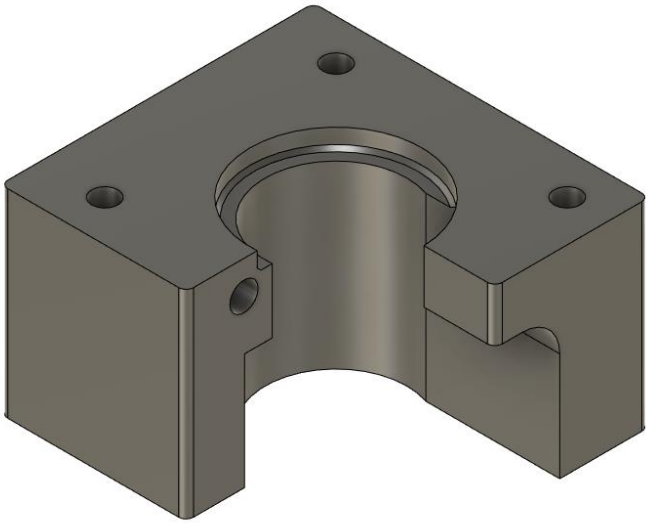

Structural – Use only suitable materials

Supports: Yes Bridging: No Special Considerations: Horizontal holes may require reaming. Part orientation shown above prioritizes clean motor flange bore.

XY Motor Bracket – Left – Part 3

Print_XYMotor_Bracket_part03_L v1.stl

Part of larger motor bracket assembly

QTY 1

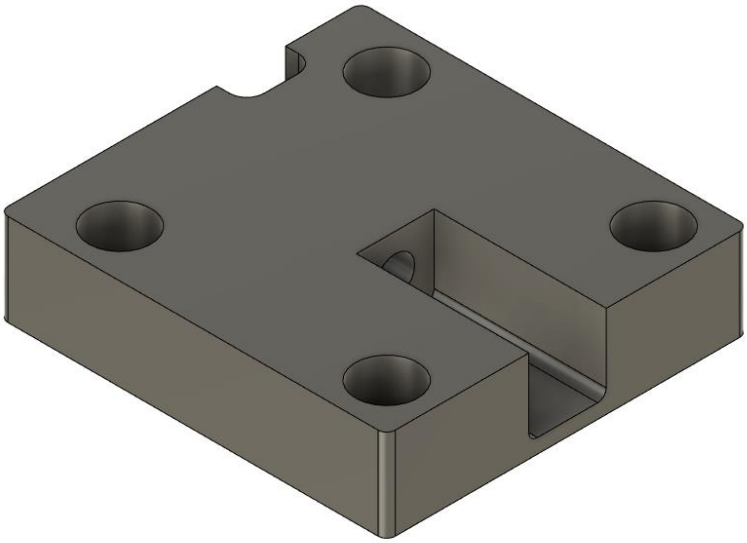

Structural – Use only suitable materials

Supports: No Bridging: No Special Considerations: Horizontal holes may require reaming.

XY Motor Bracket – Left – Part 4

Print_XYMotor_Bracket_part04_L v19.stl

Part of larger motor bracket assembly

QTY 1

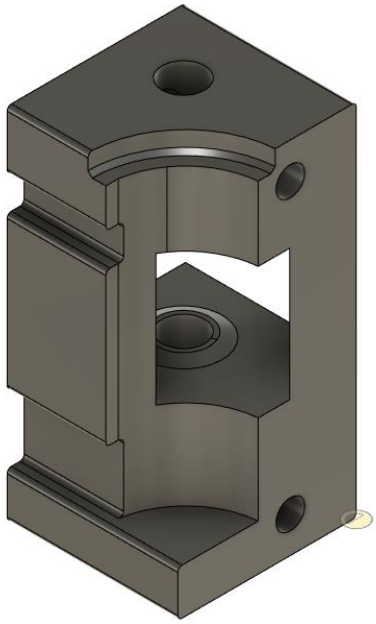

Structural – Use only suitable materials

Supports: Yes - All Bridging: No Special Considerations: Horizontal holes may require reaming. Support tuning required. May require post processing. Ensure pulley has room to rotate freely in window.

XY Motor Bracket – Right – Part 1

Print_XYMotor_Bracket_part01 v5.stl

Part of larger motor bracket assembly

QTY 1

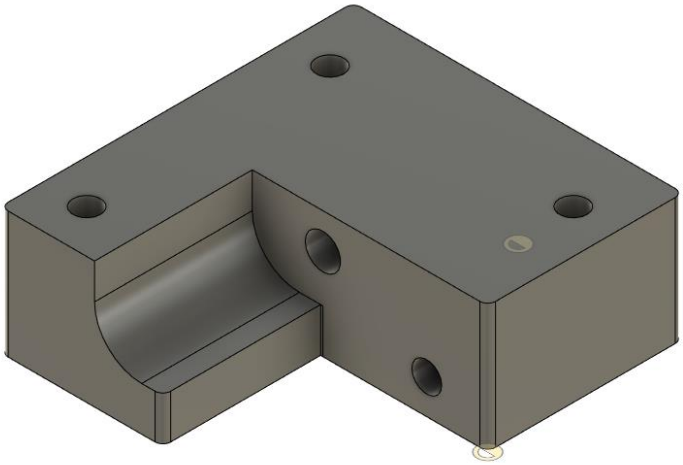

Structural – Use only suitable materials

Supports: No Bridging: No Special Considerations: Horizontal holes may require reaming.

XY Motor Bracket – Right – Part 2

Print_XYMotor_Bracket_part02 v2.stl

Part of larger motor bracket assembly

QTY 1

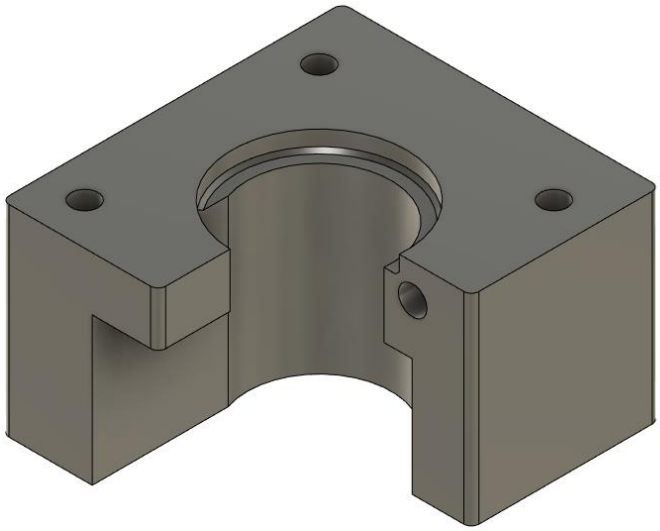

Structural – Use only suitable materials

Supports: Yes Bridging: No Special Considerations: Horizontal holes may require reaming. Part orientation shown above prioritizes clean motor flange bore.

XY Motor Bracket – Right – Part 3

Print_XYMotor_Bracket_part03 v1.stl

Part of larger motor bracket assembly

QTY 1

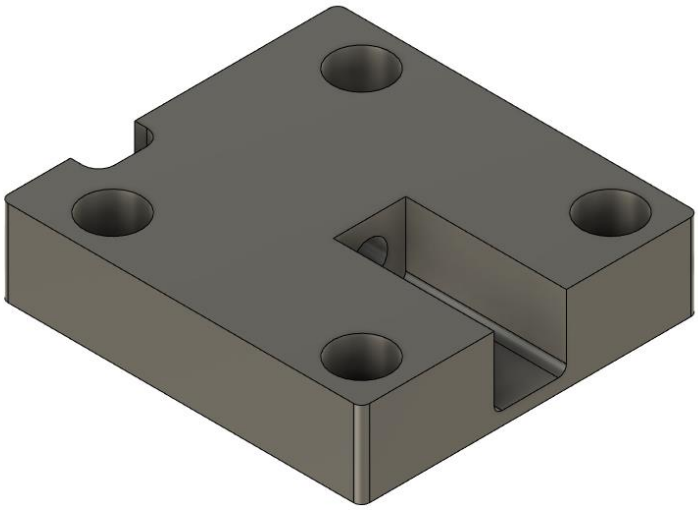

Structural – Use only suitable materials

Supports: No Bridging: No Special Considerations: Horizontal holes may require reaming.

XY Motor Bracket – Right – Part 4

Print_XYMotor_Bracket_part04 v10.stl

Part of larger motor bracket assembly

QTY 1

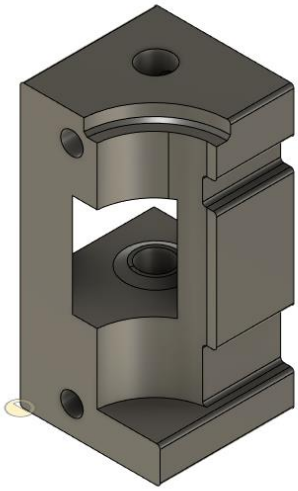

Structural – Use only suitable materials

Supports: Yes - All Bridging: No Special Considerations: Horizontal holes may require reaming. Support tuning required. May require post processing. Ensure pulley has room to rotate freely in window.

Z Axis Belt Idler - Left

Print_Z-Axis Belt Idler L v15.stl

Z Axis belt guide with integrated counterweight mount

QTY 1

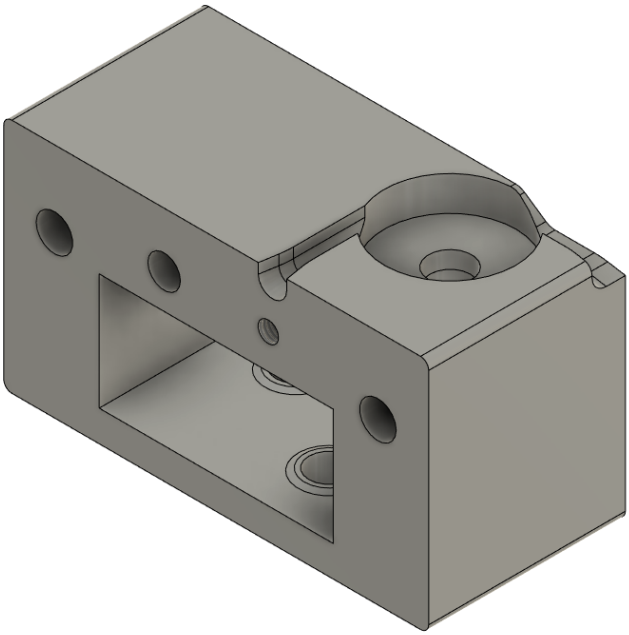

Structural – Use only suitable materials

Supports: Yes - All Bridging: Yes Special Considerations: Horizontal holes may require reaming. Support tuning required. May require post processing. Ensure pulleys have room to rotate freely in window.

Z Axis Belt Idler - Right

Print_Z-Axis Belt Idler R v15.stl

Z Axis belt guide with integrated counterweight mount

QTY 1

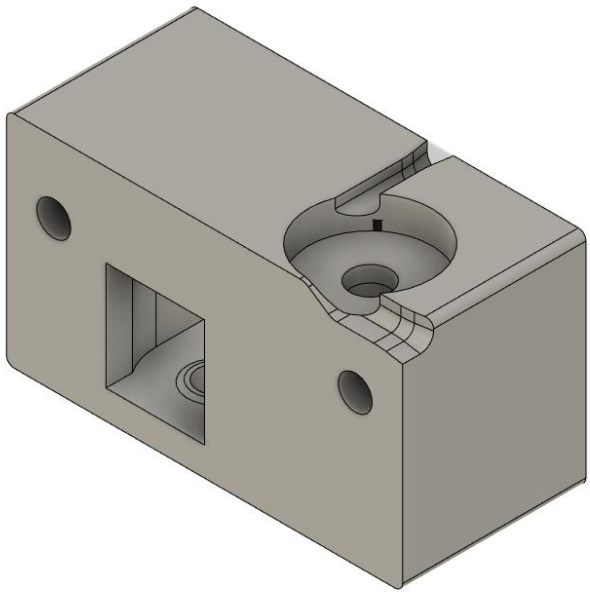

Structural – Use only suitable materials

Supports: Yes - All Bridging: Yes Special Considerations: Horizontal holes may require reaming. Support tuning required. May require post processing. Ensure pulleys have room to rotate freely in window.

Z Axis Belt Tensioner – Part 1 - Left

Print_Z-Axis Belt Tensioner L 01 v4.stl

Statically mounts one end of each Z axis belt tensioner

QTY 1

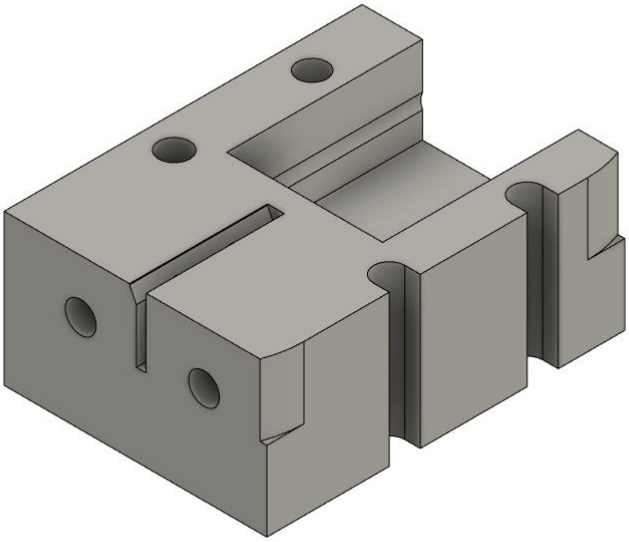

Structural – Use only suitable materials

Supports: No Bridging: No Special Considerations: Horizontal holes may require reaming.

Z Axis Belt Tensioner – Part 2 - Left

Print_Z-Axis Belt Tensioner L 02 v4.stl

Dynamically mounts one end of each Z axis belt tensioner

QTY 1

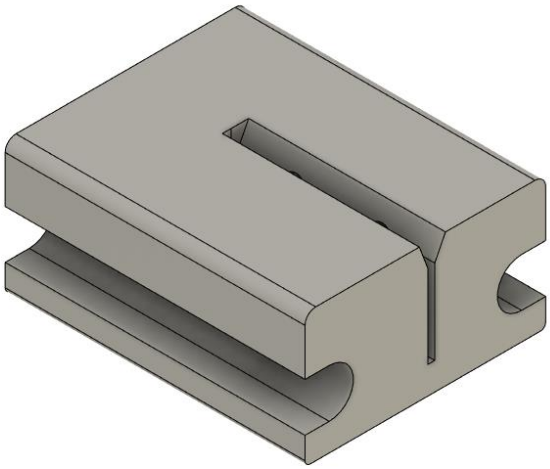

Structural – Use only suitable materials

Supports: Yes - All Bridging: No Special Considerations: Horizontal holes may require reaming. Orientation as shows prioritizes clean tooth profile in slot.

Z Axis Belt Tensioner – Part 1 - Right

Print_Z-Axis Belt Tensioner R 01 v5.stl

Statically mounts one end of each Z axis belt tensioner

QTY 1

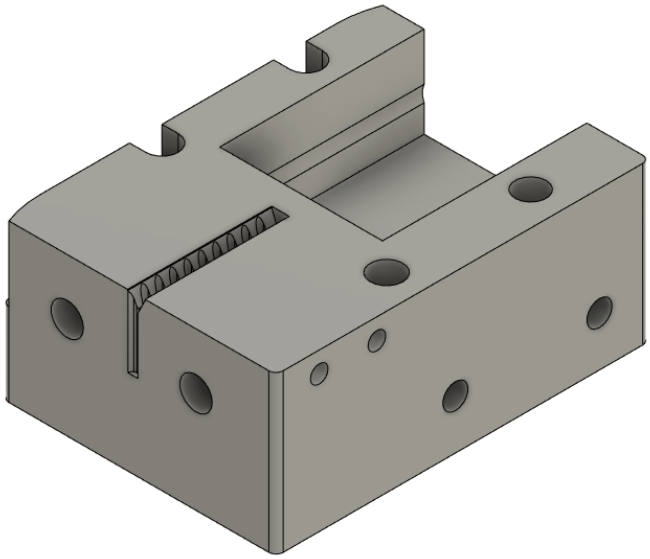

Structural – Use only suitable materials

Supports: No Bridging: No Special Considerations: Horizontal holes may require reaming.

Z Axis Belt Tensioner – Part 2 - Right

Print_Z-Axis Belt Tensioner R 02 v7.stl

Dynamically mounts one end of each Z axis belt tensioner

QTY 1

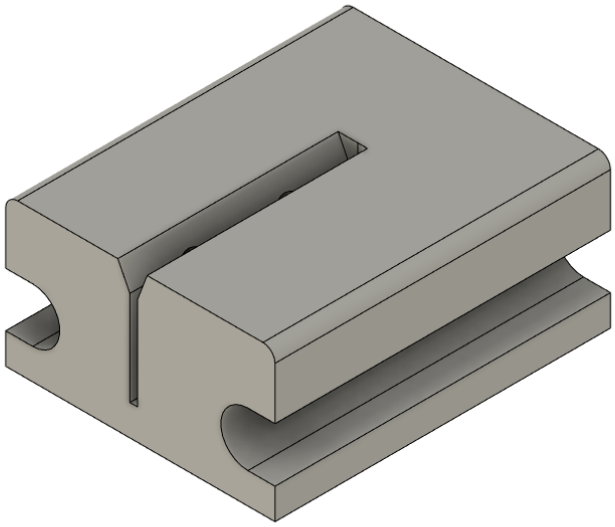

Structural – Use only suitable materials

Supports: Yes - All Bridging: No Special Considerations: Horizontal holes may require reaming. Orientation as shows prioritizes clean tooth profile in slot.

Z Axis Belt Tensioner – Part 3 - Right

Print_Z-Axis Belt Tensioner R 03 v5.stl

Part of larger right size Z axis tensioner assembly.

QTY 1

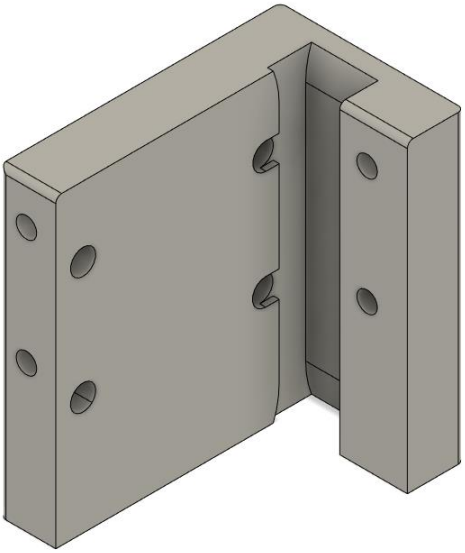

Structural – Use only suitable materials

Supports: No Bridging: No Special Considerations: Horizontal holes may require reaming. Note that "part 3" only exists for the right side assembly.

Z Axis Bracket – Left

Print_Z-Axis Bracket L v2.stl

MGN12 Mount for bed assembly

QTY 1

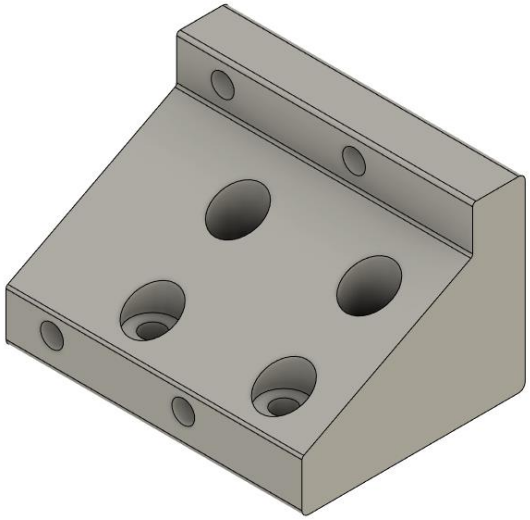

Structural – Use only suitable materials

Supports: No Bridging: No Special Considerations: Horizontal holes may require reaming.

Z Axis Bracket – Right

Print_Z-Axis Bracket R v3.stl

MGN12 Mount for bed assembly

QTY 1

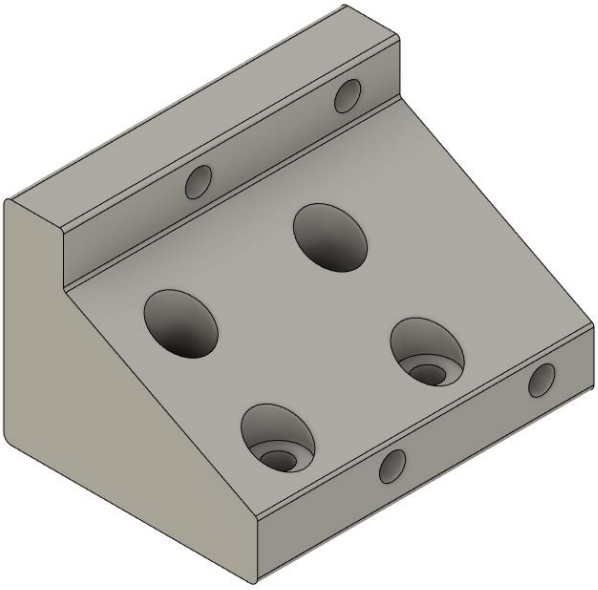

Structural – Use only suitable materials

Supports: No Bridging: No Special Considerations: Horizontal holes may require reaming.

Z Axis Support Bracket – Left

Print_Z-Axis_SupportBracket_Part01 v2.stl

2020 Extrusion mount for third Z Axis rail.

QTY 1

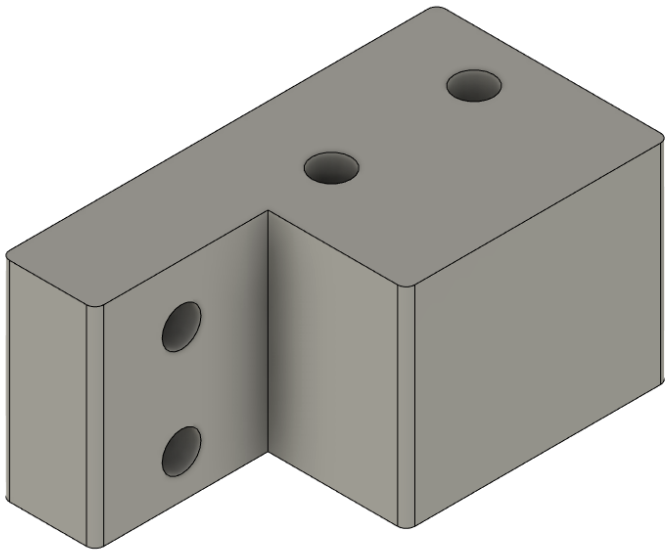

Structural – Use only suitable materials

Supports: No Bridging: No Special Considerations: Horizontal holes may require reaming.

Z Axis Support Bracket – Right

Print_Z-Axis_SupportBracket_Part02 v4.stl

2020 Extrusion mount for third Z Axis rail.

QTY 1

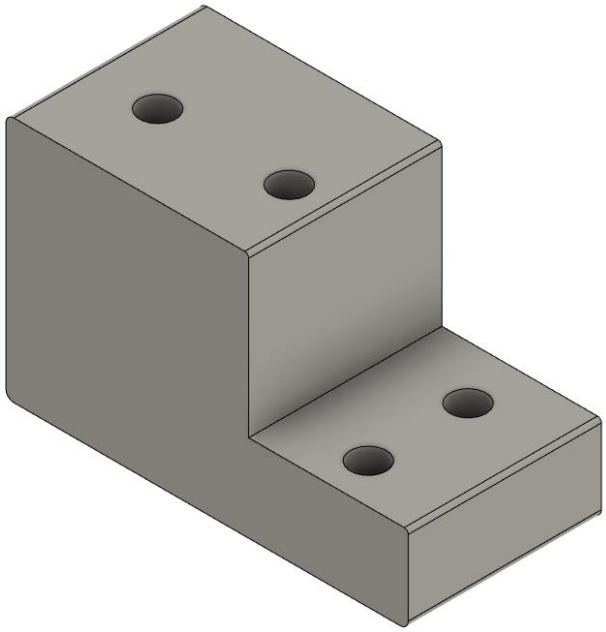

Structural – Use only suitable materials

Supports: No Bridging: No Special Considerations: None

Extruder Driven Gear

Print_51t_CustomDrivenGear v3.stl

Driven extruder gear to replace bondtech gear

QTY 1-5 (Depending on tool count)

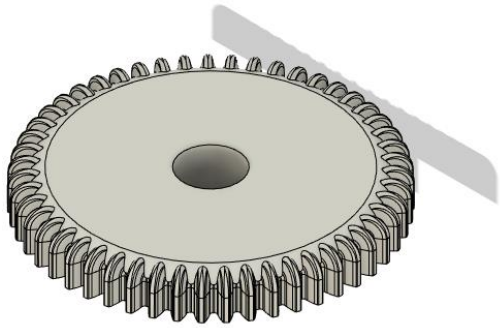

Specialized – Use IGUS Iglide filament or purchase SLS version from [KB3D Store]

Supports: Yes – Build Plate Only Bridging: No Special Considerations: Print slowly with a 0.2mm nozzle only. Center shaft bore should firmly press fit over knurled Bondtech shaft teeth.

Extruder Drive Gear

Print_Extruder_Drive_Gear v3.stl

Extruder drive gear for mounting to extruder motor shaft

QTY 1

Specialized – Use IGUS Iglide filament or purchase SLS version from [KB3D Store]

Supports: No Bridging: No Special Considerations: Print slowly with a 0.2mm nozzle only. Use a 0.1mm layer height. Line thickness of 0.2mm should result in two perimeters. Prints with only 1 perimeter will fail.

Y Axis End Stop Mount

Print_BlackStopMount_YAxis v5.stl

Used to Mount Y Axis Endstop to Right Belt Corner Bracket

QTY 1

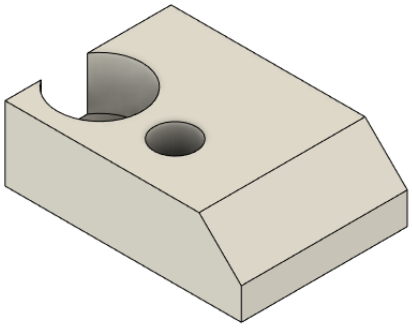

Structural – Use only suitable materials

Supports: No Bridging: No Special Considerations: None

Tool Lock End Stop Trigger

Print_ToolLockIndex v6.stl

Adjustable housing for tool lock endstop trigger magnet.

QTY 1

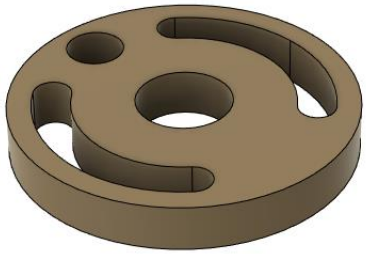

Structural – Use only suitable materials

Supports: No Bridging: No Special Considerations: None

(OPTIONAL) Tool Lock End Stop Trigger (Drill Tool)

Print_AssemblyTool_LockDrillGuide_Nema8 v1.stl

Drill guide – Assembly Tool. Used on standard builds. See Build Options page on Dozuki.

QTY 1

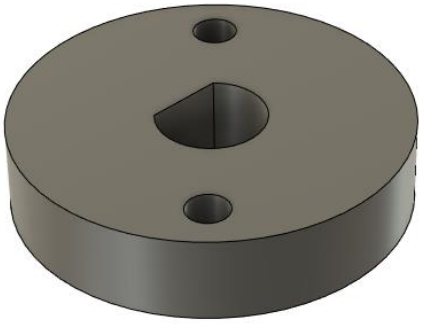

Structural – Use only suitable materials

Supports: No Bridging: No Special Considerations: None

Machine Foot

Print_Blackbox_Foot v2.stl

Suspends Blackbox above a bench/table to clear Z axis components

QTY 4

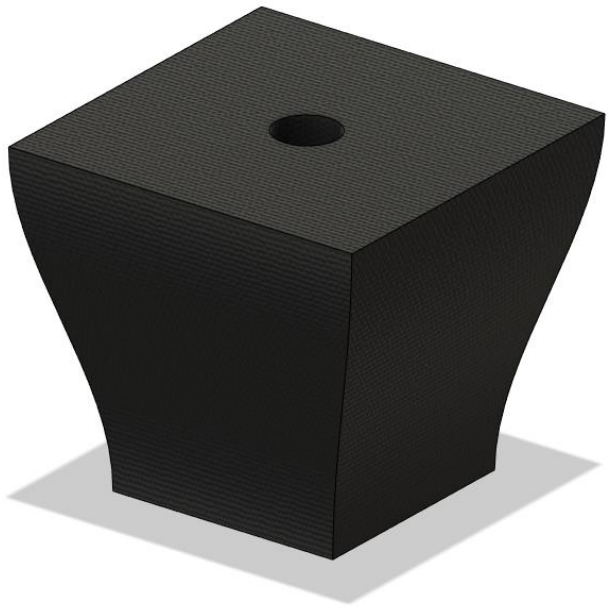

Structural – Use only suitable materials

Supports: No Bridging: No Special Considerations: None

Cable Chain Mount - XY

Print_IgusMountFrame v3.stl

Mounts frame end of XY drag chain.

QTY 1

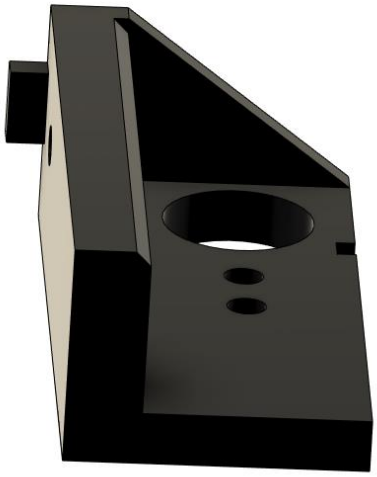

Structural – Use only suitable materials

Supports: Yes – Build Plate Only Bridging: No Special Considerations: None

Cable Chain Mount – Z Bottom

Print_ZChainMount_Bottom v1.stl

Mounts frame end of Z drag chain.

QTY 1

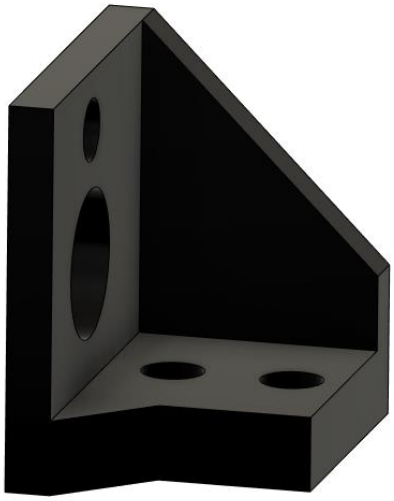

Structural – Use only suitable materials

Supports: No Bridging: No Special Considerations: None

Cable Chain Mount – Z Top (Bed)

Print_ZChainMount_Top v1.stl

Mounts heated bed end of Z drag chain.

QTY 1

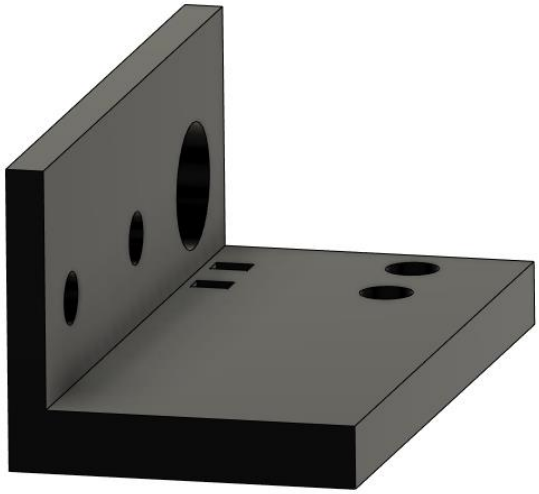

Structural – Use only suitable materials

Supports: No Bridging: No Special Considerations: None